Mark 60HP Series

Self Operated Pressure Regulators

The Mark 60HP Sliding Gate Pressure Regulator is used to regulate the downstream pressure to a predetermined setpoint. The spring in the Mark 60 holds the sliding gate seats in their normally open position to allow the process media to pass through the seats.

The downstream pressure is sensed beneath the diaphragm. **(A sensing line is required on sizes: 2-1/2", 3", and 4").** As the downstream pressure exceeds the setpoint, pressure is exerted on the diaphragm which raises the stem to modulate the disc (the moveable component on the sliding gate seat set) toward the closed position. As the seats close, downstream pressure will be reduced to the required setpoint. A decrease in pressure relaxes the spring and diaphragm to move the seats toward the open position.

The MK60H features a handwheel that replaces the adjusting screw for easy changes to the setpoint

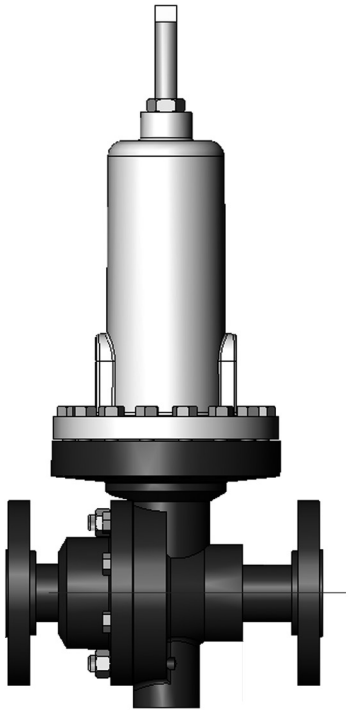

Mark 60HP Features

- **Sliding Gate Trim** – unique seat design for unsurpassed trim life and accuracy
- **Jorcote Seat Coating** – ceramic composite for liquids, gases and especially steam. Very low friction with outstanding wear resistance and a temperature rating of up to 550°F. Steam tested to 1,000,000 cycles and still maintained Class IV leakage.
- **Jorlon Diaphragm** – extremely durable, virtually universally applicable up to 450°F. Tested without failure to over 1,000,000 full stroke cycles. Ideal for steam, gases and liquids. 316SST diaphragm applicable up to 550°F.
- **Straight-through Flow** – The flow is straight through the valve seats and body. Direction of the disc travel is perpendicular to the flow, not opposed to the direction of the flow. Thus, the flow does not unbalance the seats. The MK60 can use a wider range of its stroke to give accurate control; less offset
- **Quiet Operation** – typically 5-10 dB less than conventional globe style regulators. The disc and plate are always in contact, which eliminates chattering. Straight-through flow minimizes turbulence. Multiple orifices in the plate and disc divide the flow stream into smaller flow components
- **Minimum Maintenance** – The MK60 sliding gate seats require no special tools for disassembly. The seats are pre-lapped at the factory and are self-lapping while in operation ensuring a continual tight shutoff

JORDANVALVE

Jordan Valve a division of Richards Industries
3170 Wasson Road • Cincinnati, OH 45209
513.533.5600 • 800.543.7311 • 513.871.0105 (f)
jordan@richardsind.com • www.jordanvalve.com

Specifications

Sizes: (note: 1/4" & 3/8" sizes use 1/2" body with reducers)
- Mark 60HP: 1/4" – 4" (DN8 – DN100)

End Connections:
- Threaded – FNPT, BSPT, BSPP (1/2" – 2" only)
- ANSI Flanges (150#, 300#)
- DIN Flanges (PN 10/16, PN 25/40)

Spring Housing:
- DI – 1/4" – 2" (DN8 – DN50)
- DI/Steel – 2-1/2" – 4" (DN65 – DN100)

Body Materials:
- Ductile Iron
- Bronze (1/2" – 2"; DN15 – DN50)
- Carbon Steel (A216 WCB)
- Stainless Steel (A351/CF8M)

Trim Materials:
- 303SST – Standard on Ductile Iron, Bronze, Carbon Steel valves
- 316SST – Standard on Stainless Steel valves
- Monel, Hastelloy and other Alloys available

Reduced Pressure Control Ranges: Select a range to match your setpoint. For optimal performance, your setpoint should fall in the upper portion of the selected range.

Model	Size (DN)	Spring Ranges	
		PSI	Bar
60HP	1/2" – 2" (DN15 – DN40)	75 – 190	5,2 – 13,1
		100 – 320	6,9 – 22,1
		150 – 450	10,3 – 31,0
	2-1/2" – 4" (DN65 – DN100)	30 – 75	2,07 – 5,17
		65 – 110	4,5 – 7,6

Seat Materials:
- Jorcote on SST – Standard
- Other materials available – Consult factory

Diaphragm Materials:
- Jorlon - Standard
- Stainless Steel - Standard
- Buna-N - Standard
- Viton – Optional

Service: Steam, water, oil, gas, air and chemicals

Shutoff: ANSI Class IV

CV Values & Maximum Differential Pressures

Cv (Kv)	Size (DN)	Seat Material	Max. ΔP PSI (bar)
0.84 (0,74)	1/4" (DN8)	Jorcote	400 (27,6)
1.6 (1,4)	3/8" (DN12)	Jorcote	400 (27,6)
2.5 (2,2)	1/2" & 3/4" (DN15 & DN20)	Jorcote	400 (27,6)
4.4 (3,8)			
6.4 (5,5)	1" & 1-1/4" (DN25 & DN32)	Jorcote	400 (27,6)
9.5 (8,2)			
15 (12,9)	1-1/2" (DN40)	Jorcote	325 (22,4)
25 (21,5)	2" (DN50)	Jorcote	325 (22,4)
30 (25,8)			
55 (47,3)	2-1/2" (DN65)	Jorcote	150 (10,34)
115 (99)	3" (DN75)	Jorcote	150 (10,34)
200 (172)	4" (DN100)	Jorcote	150 (10,34)

Low Flow Cv's: reduced Cv's (Kv's) are available. Cv (Kv) ratings of smaller sized valves can be supplied in a larger valve size

0.42 (0,36)	0.21 (0,18)	0.08 (0,07)	0.04 (0,03)	0.02 (0,02)
0.008 (0,007)	0.004 (0,003)	0.002 (0,002)	0.0008 (0,007)	

Maximum Working Pressure, PSI

- Mark 60HP Size Range: 1/4" - 2"

Temp °F	DI Body			BRZ Body		
	150#	300#	TE	150#	300#	TE
-20 to 100	250	600	600	225	500	500
200	235	600	600	215	475	475
300	215	565	600	195	425	425
400	200	525	600	170	375	375
500	170	495	600	150	325	325
550	125	450	600	--	--	--

- Mark 60HP Size Range: 1/4" - 2"

Temp, °F	CS Body			SS Body		
	150#	300#	600#/TE	150#	300#	600#/TE
-20 to 100	285	740	1480	275	720	1440
200	260	675	1360	240	620	1240
300	230	655	1310	215	560	1120
400	200	635	1265	195	515	1025
500	170	600	1205	170	480	955
550	125	535	1075	125	445	890

- Mark 60HP Size Range: 2 1/2" - 4"

Temp, °F	DI Body		CS Body		SS Body	
	150#	300#	150#	300#	150#	300#
-20 to 100	250	500	285	500	275	500
200	235	500	260	500	240	500
300	215	500	230	500	215	500
400	200	500	200	500	195	500
500	170	495	170	500	170	500
550	--	--	125	500	125	445

Maximum Working Pressure, BAR

- Mark 60HP Size Range: DN8 - DN50

Temp, °C	DI Body			BRZ Body		
	150#	300#	TE	150#	300#	TE
-29 to 38	17	41	41	16	34	34
93	16	41	41	15	33	33
149	15	39	41	13	29	29
204	14	36	41	12	26	26
260	12	34	41	10	22	22
288	8.6	31.0	41	--	--	--

- Mark 60HP Size Range: DN8 - DN50

Temp, °C	CS Body			SS Body		
	150#	300#	600#/TE	150#	300#	600#/TE
-29 to 38	20	51	102	19	49	99
93	18	47	94	17	43	85
149	16	45	90	15	39	77
204	14	44	87	13	36	71
260	12	41	83	12	33	66
288	9	37	74	8.6	31	61

- Mark 60HP Size Range: DN65 - DN100

Temp, °C	DI Body		CS Body		SS Body	
	150#	300#	150#	300#	150#	300#
-29 to 38	17	34	20	34	19	34
93	16	34	18	34	17	34
149	15	34	16	34	15	34
204	14	34	14	34	13	34
260	12	34	12	34	12	34
288	--	--	8.6	34	8.6	30.7

Notes:
1. Ratings given are maximum body ratings, and may be decreased by diaphragm material ratings or other factors.
2. Consult factory for temperatures above 550°F or for materials not listed above.

DIMENSIONS

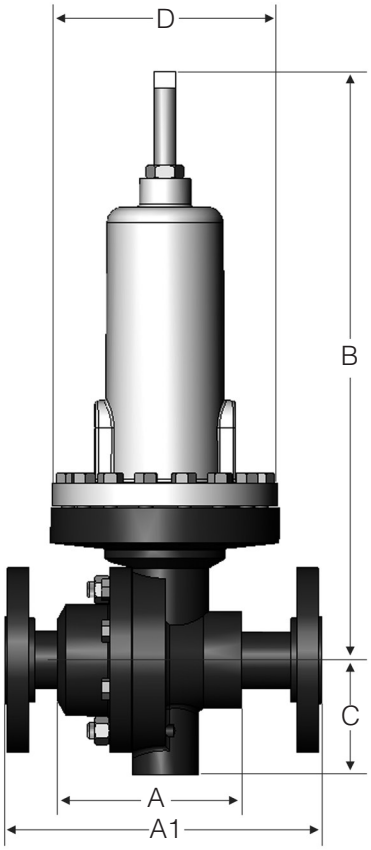

- Flanged Ends, Inches

Size	ANSI Flange	A1		B	C	D	Weight (lbs)
		DI/BRZ	CS/SS	ALL	ALL	ALL	All
1/2"	150#	7.25	7.25	12.75	1.69	5.20	21 •
	300#	7.50	7.50	12.75	1.69	5.20	
	• 600#	8.00	8.00	12.25	1.69	5.20	
3/4"	150#	7.25	7.25	12.75	1.69	5.20	22 •
	300#	7.62	7.62	12.75	1.69	5.20	
	• 600#	8.12	8.12	12.25	1.69	5.20	
1"	150#	7.25	7.25	13.25	2.62	5.20	37
	300#	7.75	7.75	13.25	2.62	5.20	
	• 600#	8.25	8.25	12.75	2.62	5.20	
1-1/4"	150#	7.87	—	12.75	2.62	5.20	37
	300#	8.37	—	12.75	2.62	5.20	
1-1/2"	150#	8.75	8.75	13.75	2.31	5.20	45
	300#	9.25	9.25	13.75	2.31	5.20	
	• 600#	9.87	9.87	13.25	2.31	5.20	
2"	150#	10.00	10.00	14.00	2.75	5.20	49
	300#	10.50	10.50	14.00	2.75	5.20	
	• 600#	11.25	11.25	13.50	2.75	5.20	

• 600# are not IFE
• For IFE, add 1" to all "B" dimensions (1" – 2" sizes only)

- Threaded & FSW Ends, Inches

Size	Material	A	B	C	D	Weight (lbs)
1/2" - 3/4"	DI/BRZ	3.62	12.75	1.75	5.12	15
	CS/SS	3.62	12.75	1.75	5.12	17
1"	DI/BRZ	4.12	13.00	2.12	5.20	21
	CS/SS	4.18	13.25	2.12	5.20	25
1-1/4"	DI/BRZ	4.12	13.00	2.12	5.20	21
1-1/2"	DI/BRZ	4.50	13.25	2.31	5.20	23
	CS/SS	4.81	13.75	2.50	5.20	31
2"	DI/BRZ	4.50	13.25	2.50	5.20	26
	CS/SS	5.50	14.00	2.50	5.20	35

- Threaded & FSW Ends, Metric

Size	Material	A	B	C	D	Weight (lbs)
DN15 & 20	DI/BRZ	92	324	45	130	6,8
	CS/SS	92	324	45	130	7,7
DN25	DI/BRZ	105	330	54	132	9,5
	CS/SS	106	337	54	132	11,3
DN32	DI/BRZ	105	330	54	132	9,5
DN40	DI/BRZ	114	337	59	132	10,4
	CS/SS	122	349	64	132	14,1
DN50	DI/BRZ	114	337	64	132	11,8
	CS/SS	140	356	64	132	15,9

- Flanged Ends, Metric[3]

Size	ANSI Flange	A1		B[2]	C	D	Weight (kgs)
		DI/BRZ[1]	CS/SS	ALL	ALL	ALL	All
15	10/16	184	130	324	43	132	9,5
	25/40	184	130	324	43	132	
20	10/16	184	150	324	43	132	10
	25/40	184	150	324	43	132	
25	10/16	184	160	337	67	132	17
	25/40	184	160	337	67	132	
32	10/16	200	—	324	67	132	17
	25/40	200	—	324	67	132	
40	10/16	222	200	349	59	132	20
	25/40	222	200	349	59	132	
50	10/16	254	230	356	70	132	22
	25/40	254	230	356	70	132	

[1] Not IFE and not per DIN3202
[2] For IFE, add 25,4 mm
[3] For all DIN flanges, please consult factory

Dimensions

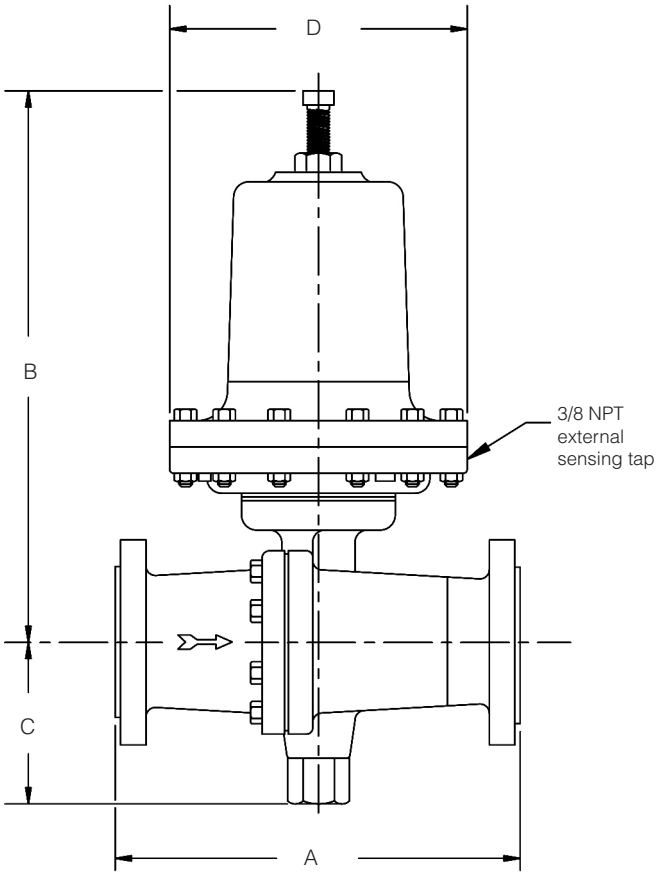

- Mark 60HP: Flanged Ends

Size	Flange Rating	Dimensions (inches)				Weight (lbs.)
		A	B	C	D	
2-1/2"	125-150#	10.88	22.25	6.95	10.65	165
	250-300#	11.50				
3"	125-150#	11.75	22.25	6.95	10.65	185
	250-300#	12.50				
4"	125-150#	13.88	23.45	8.00	10.65	215
	250-300#	14.50				

- Mark 60HP: Flanged Ends, Metric

Size (DN)	Flange PN	Dimensions (mm)				Weight (kg)
		A[1]	B	C	D	
DN65	10/16	287	565	177	270	75
	25/40	293				
DN80	10/16	313	565	177	270	84
	25/40	313				
DN100	10/16	353	595	203	270	98
	25/40	353				

1. Not per DIN 3202

Jorlon Diaphragm - Revolutionary Diaphragm Sets New Standard

- Easily retrofitted – Jorlon can be easily retrofitted in the field with no additional parts. For regulators purchased after the fall of 1991, only the diaphragm needs to be changed to retrofit either SST or elastomer diaphragms.
- Chemical compatibility – Jorlon is PTFE based, so it is compatible with most media except fluorinated gases and halogenated fluorocarbons. Whether the application is steam, process gases or fluids, Jorlon should be your choice.
- High pressure limits – Jorlon has been pressure tested in the Mark 60/60HP to pressures well in excess of the maximum allowable pressures of the valve. The outstanding performance of the Mark 60 is a combination of Jorlon diaphragm and sliding gate seat technology.
- Improved droop performance – A metal diaphragm is much more rigid than an elastomer diaphragm. As such, metal diaphragms have decreased sensitivity thereby diminishing performance and accuracy in a self-operated regulator. Jorlon will improve droop performance when used instead of a SST diaphragm as its properties are more similar to those of elastomer materials.
- Less expensive – Jorlon is less expensive than many other diaphragm materials, further increasing its customer value.
- High steam pressure capability – Extensive steam testing of Jorlon in the Mark 60/60HP pressure regulator has shown that Jorlon material is ideal for high pressure steam service. For the Mark 60/60HP in Sizes 2" (DN50) and below, Jorlon may be used up to 405 psi saturated steam service (405 psi / 28 bar @ 450°F / 232°C). For larger Mark 60/60HP's, it may be used up to 125 psi saturated steam service (125 psi / 8,6 bar @ 353°F / 178°C) saturated steam.
- Fast delivery – Rely on our 36 hour delivery with Jorlon as the diaphragm material.
- Extremely long life – Under 300 psi air, Jorlon surpasses 1,000,000 full stroke cycles without failure. The harshest test was on 450°F saturated steam, where Jorlon exceeded the cycle count for stainless steel by over 150 times - the test was stopped and the Jorlon diaphragm had yet to fail.
- Lower cost of ownership – Less droop provides more accuracy, improving efficiently and productivity. Extremely long life results in more production up-time, fewer spare parts expenses and less repair labor.

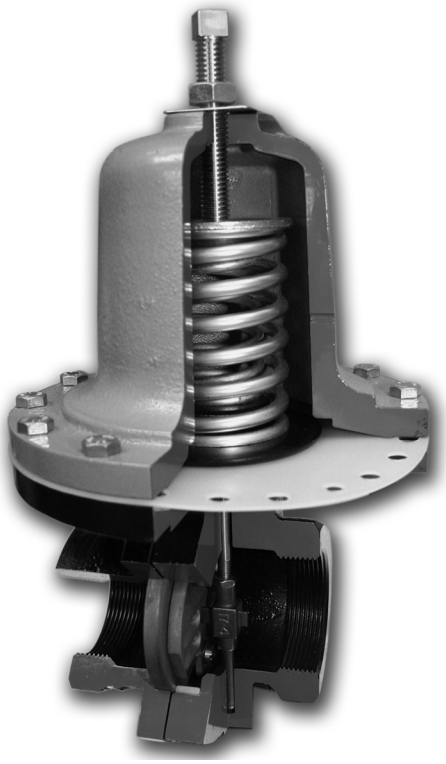

ORDERING SCHEMATIC

Model No	Size	Body Mat'l	/	1	2	3	4	5	6	7	8	9	10	11	12

	Model
60HP	High Pressure

	Size
025	1/4" (DN8)
038	3/8" (DN10)
050	1/2" (DN15)
075	3/4" (DN20)
100	1" (DN25)
125	1-1/4" (DN32)
150	1-1/2" (DN40)
200	2" (DN50)
250	2-1/2" (DN65)
300	3" (DN80)
400	4" (DN100)

	Body Material
DI	Ductile Iron
BR	Bronze (1/4" – 2")
CS	Carbon Steel
S6	Stainless Steel
CI	Cast Iron (2-1/2" – 4')

1 & 2	End Connections
	1/4" – 2" MK60/61
PT	NPT
BT	BSPT
BP	BSPP
SW	FSW
F1	125# IFE (Except IFE)
I5	150# IFE
F5	150# FE (Except IFE)
F2	250#FE (Except IFE)
I3	300# IFE
F3	300# FE (Except IFE)
	2-1/2" – 4" MK60
I1	125# IFE
I5	150# IFE
I2	250# IFE
I3	300# IFE
I7	PN10 DIN IFE (CS/S6) DN15-150
I6	PN16 DIN IFE (CS/S6) DN15-150
I8	PN25 DIN IFE (CS/S6) DN15-150
I4	PN 40 DIN IFE (CS/S6) DN15-150

3 & 4	Trim
S3	303SS
S6	316SS
I3	303SS IFE (1/2" - 2")
I6	316SS IFE (1/2" - 2")

5	Seat Material
A	303SST (1/4" – 2")
B	316SST (1/4" – 2")
Q	303SST/Teflon Coated
R	316SST/Teflon Coated
V	303SS/Jorcote
W	316SS/Jorcote

6	Cv (Kv)		
1	0.21 (0,28)	9	15 (12,9)
2	0.42 (0,36)	A	25 (21,6)
3	0.84 (0,72)	B	30 (25,9)
4	1.6 (1,4)	D*	55 (47,4)
5	2.5 (2,2)	F*	85 (73,3)
6	4.4 (3,8)	G*	115 (99,1)
7	6.4 (5,5)	I*	200 (172)
8	9.5 (8,2)	* 2-1/2" – 4" only	

7 & 8	MK60HP Spring Range PSI (Bar)		
	1/2" – 2"	2-1/2" – 4"	
A1	75-190 (5-13)	71	30-75 (2-5)
A7	100-320 (7-22)	98	65-110 (4-8)
A9	150-450 (10-31)		

9 & 10	Diaphragm
S6	316SST
VI	Viton
BN	Buna-N (standard above 2")
JL	Jorlon

11 & 12	Actuator
MD	DI for Metal Diaphragm
ED	DI for Elastomer Diaphragm
SM	316 for Metal Diaphragm
SE	316 for Elastomer Diaphragm

Mark 60HP High Pressure Self-Operated Pressure Regulators

Jordan Valve offers a full range of pressure regulators in addition to the Mark 60 Self-Operated Pressure Regulator

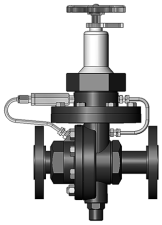

Mark 62 Internally Piloted Pressure Regulator

The Mark 62 is a specialty valve designed for critical application regulation in locations where space is limited. Small and lightweight in design, the Mark 62 valve provides the accuracy of a piloted valve with the size, weight, and appearance of a single, self-operated valve.

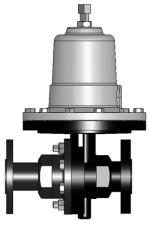

Mark 63/64 Differential Pressure Regulators

The Mark 63 is designed to maintain a constant differential between the pressure on the discharge side of the regulator and the signal pressure loaded on the diaphragm. The Mark 64 provides the same flow capacity as the Mark 63 but with less offset in controlled pressure due to a larger diaphragm.

Mark 65 Vacuum Regulators

The Mark 65 vacuum regulators control very accurately and shutoff tightly to maintain the proper vacuum setting. They are used to maintain vacuums at predetermined settings and to regulate vacuums on evaporators, cookers, grinding fixtures, milking machines, altitude chambers and other vacuum systems.

Mark 66 Air-Loaded Pressure Regulators

The Mark 66 is a highly accurate and economical air loaded pressure regulator that provides regulation from a local station or from a remote station. The operation of the MK66 requires no control spring or pilot. Instead, a static signal is applied to the top of the diaphragm to determine the setpoint.

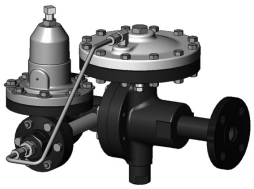

Mark 67 Pilot-Operated Pressure Regulators

The Mark 67 is for critical pressure reducing applications and provides a greater accuracy and lower offset than can be achieved with a self-operated regulator. Because of its versatility in control, and its accuracy, the Mark 67 can be used in a wide variety of applications including: controlling the pressure of gaseous oxygen to furnaces at steel mills, controlling pressure of sealing oil on turbines, and pressure control on steam mains and distribution lines.

Mark 68G Pressure Regulator

The Mark 68G is a globe-style pressure reducing regulating valve that offers high capacity, accurate regulation, and easy servicing, making it the ideal choice for your industrial-grade pressure reducing applications.

Mark 68HP High Pressure Regulating Valve

The Mark 68HP is designed primarily for high pressure steam service as commonly found in power plants, refineries, pulp & paper mills, and other high pressure process applications.

JORDANVALVE

Jordan Valve a division of Richards Industries
3170 Wasson Road • Cincinnati, OH 45209
513.533.5600 • 800.543.7311 • 513.871.0105 (f)
jordan@richardsind.com • www.jordanvalve.com