METALLIC EXPANDSION JOINT

RELIABLE SOLUTION FOR STRUCTURAL MOVEMENT

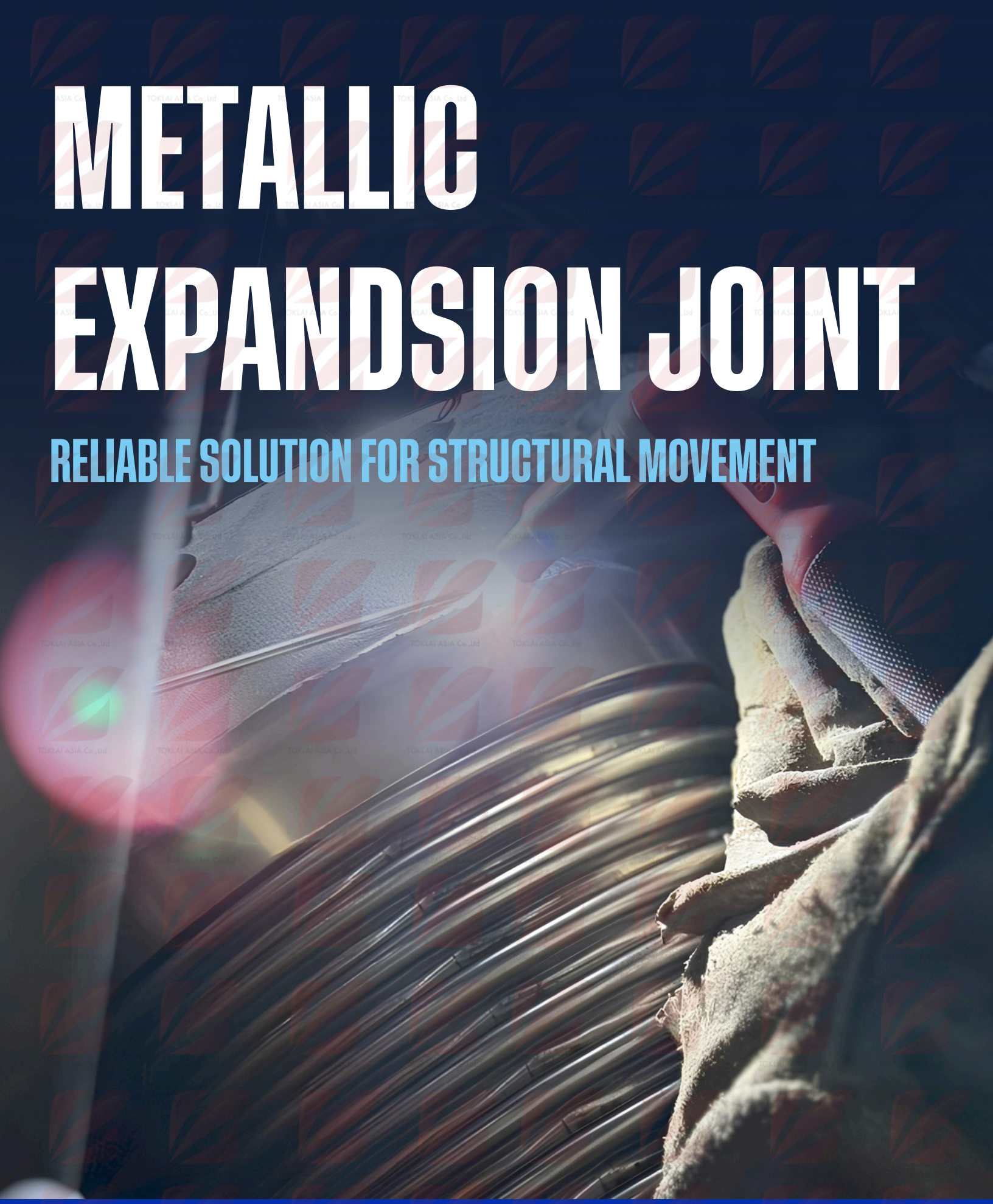

More Information
www.toklaiasia.com / www.toklaisteel.com

Contact Us
E-mail : sales@toklaisteel.com



Solar & Boiler Industry

For solar energy systems and boilers, metal hoses are used to

- Connect individual solar panels
- Accommodate thermal expansions
- Water supply
- Fexible connections to auxiliary devices such as accumulators or gas lines inside the device



Aviation & Aerospace

- Fuel lines
- Protects from high & low temperature and strong vibrations
- Flexible hose lines for engine control
- Protection of cables
- Use in cryogenic environments in rockets and satellites.



Food Industry

- Transfers drinking water, milk, juices, alcohol, oils, and other food-grade liquids.
- Connects gas lines and transports steam for food processing.
- Handles hot water and chemical sanitizers for cleaning.



Gas Production

- Transporting industrial and medical gases under high pressure.
- Transporting all liquefied gases at extremely low temperatures.
- Used in drilling rigs, pipelines, and refineries.
- Used in gas bottles and cylinder filling systems.



Energy Sector

- Used in high-pressure steam lines, natural gas transport, and nuclear cooling systems.
- Used for LNG transfer, hydrogen storage, and solar thermal applications.
- Handles high-temperature exhaust, geothermal systems, and waste heat recovery.



Vacuum Technology

- Highest vacuum performance for UHV systems and accelerators.
- Good vacuum performance in high vacuum pumping systems.
- Flexible, vibration-absorbing for roughing pump lines.
- Braided for pressure support in foreline connections.



Railways

- Entire cooling and exhaust gas system
- Absorbing mechanical vibrations
- Ventilation system for switch gases in high speed train
- Compensating for thermal expansion
- Cooling and air conditioning systems of locomotives
- Protects sensitive controls and electrical cables

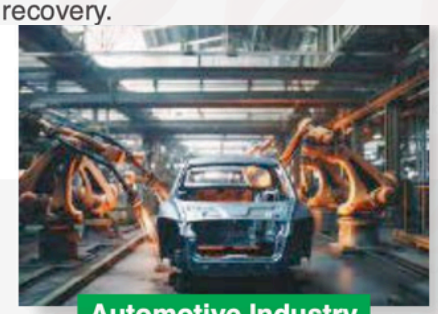

Automotive Industry

Metal flexible hoses are used in automotive exhaust systems to

- Absorb vibrations
- Reduce noise
- Compensate for thermal expansion
- Also used as filler neck and fuel line



Power Generation

- Steam & combustion turbine systems
- Cooling turbine blades
- Fuel atomizer lines
- Gas transport lines
- Inert gas lines
- Fuel oil burner connections



Cryogenic Systems

- Transporting Nitrogen
- Transporting Ammonia
- Transporting Liquid oxygen
- Transporting Hydrogen & Helium and other cryogenic fluids.

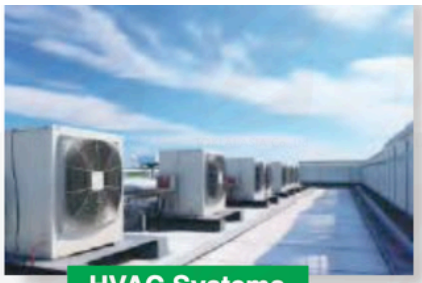

HVAC Systems

- Connect pumps & adapts thermal expansion
- Isolate vibrations in refrigeration units and compressors
- Employed in high-rise buildings to handle the movement caused by seismic or thermal forces

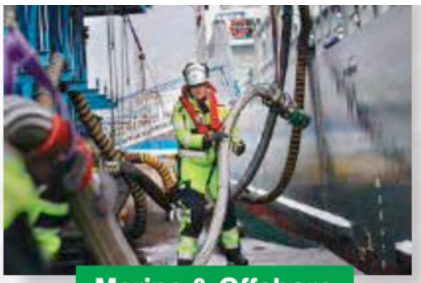

Marine & Offshore

- Exhaust systems
- Cooling water systems
- Fuel lines
- Lubricants lines
- FPSO & SPM lines
- Offloading & transfer of fluids



Refineries

- Connecting catalytic cracking units
- Oil and gas burners
- Water lines in gas engine cooling systems
- Steam injection
- Hydrocarbon drain lines
- Fuel oil burner connections



Chemical Plants

- Connecting weigh scales
- Facilitating the loading and unloading of tank trucks
- Steam lines
- Transporting highly corrosive media



Steel Plants

- High-temperature lubrication
- Water cooling lines
- Oxygen and water lancing
- Argon purging lines
- PCI coal injection
- Tuyere and stave cooling



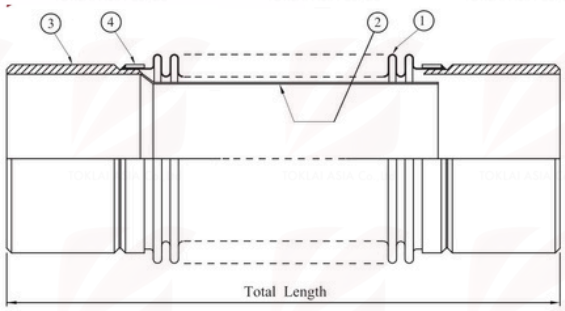

CONSTRUCTION

Item	Part	Material
1	Bellows	SS304
2	Internal Sleeve	SS304
3	Weld Ends	Sch. 40
4	Seal Ring	SS304

FEATURE:

Stainless steel multiply bellows welded with SS400 tube end.
Internal sleeve is stainless steel.
Designed to accommodate axial movement of pipeline in high working pressure and high working temperature.

INSTALLATION

Heating no need elongation to getting compression 50 mm. or 75 mm.
Cooling need compression 50 mm. or 75 mm. to getting expansion 50 mm. or 75 mm.

Specification

Nominal Bore		Total Length		Bellows O.D.		Bellows CORR.	Bellows PLY	Axial Movement		Working Pressure		Axial Spring Rate	Effective Area	
mm	inch	mm	inch	mm	inch	No.	No.	mm	inch	bar	psi	N/mm	cm²	inch²
40	1 1/2	360	14.17	58.0	2.28	32	2	-50	2	25	363	29.00	20.2	3.1
		515	20.28			48		-75	3			19.34		
50	2	360	14.17	73.0	2.85	24	2	-50	2	25	363	44.25	32.1	5.0
		515	20.28			36		-75	3			29.50		
65	2 1/2	360	14.17	90.0	3.54	20	2	-50	2	25	363	89.82	49.1	7.6
		515	20.28			30		-75	3			59.88		
80	3	360	14.17	104.5	4.11	20	2	-50	2	25	363	81.54	67.4	10.5
		515	20.28			30		-75	3			54.36		
100	4	360	14.17	132.0	5.20	16	2	-50	2	25	363	146.06	108.9	16.9
		515	20.28			24		-75	3			97.37		
125	5	360	14.17	161.0	6.34	15	2	-50	2	25	363	161.14	167.1	25.9
		515	20.28			23		-75	3			105.33		
150	6	360	14.17	190.0	7.48	14	2	-50	2	25	363	192.81	239.2	37.1
		515	20.28			21		-75	3			128.54		
200	8	360	14.17	250.0	9.84	13	2	-50	2	16	232	264.16	420.9	65.2
		515	20.28			19		-75	3			179.99		
200	8	360	14.17	250.0	9.84	13	3	-50	2	25	363	264.16	420.9	65.2
		515	20.28			19		-75	3			179.99		
250	10	360	14.17	312.0	12.28	12	2	-50	2	16	232	428.99	644.6	103.0
		515	20.28			18		-75	3			285.99		
250	10	360	14.17	312.0	12.28	12	3	-50	2	25	363	428.99	644.6	103.0
		515	20.28			18		-75	3			285.99		
300	12	360	14.17	364.5	14.35	12	2	-50	2	16	232	499.81	925.4	143.4
		515	20.28			18		-75	3			333.21		
300	12	360	14.17	364.5	14.35	12	3	-50	2	25	363	499.81	925.4	143.4
		515	20.28			18		-75	3			333.21		

Other movements, sizes, and pressure expansion joint available on request

Pressure Temperature rating with ISO - 15348

Bar	Temperature in degree C					
	~120 °C	150 °C	200 °C	250 °C	300 °C	350 °C
PN25	25	22.85	20.89	19.58	18.61	17.62
PN16	16	14.62	13.37	12.53	11.91	11.28

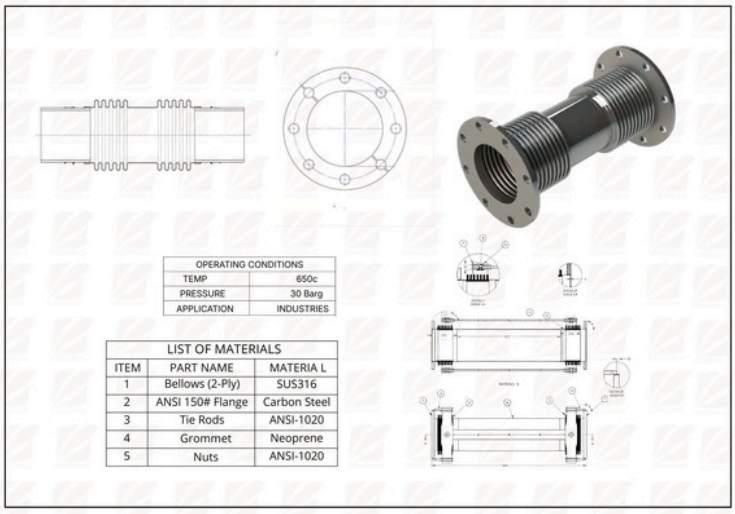

OPERATING CONDITIONS	
TEMP	650c
PRESSURE	30 Barg
APPLICATION	INDUSTRIES

LIST OF MATERIALS		
ITEM	PART NAME	MATERIA L
1	Bellows (2-Ply)	SUS316
2	ANSI 150# Flange	Carbon Steel
3	Tie Rods	ANSI-1020
4	Grommet	Neoprene
5	Nuts	ANSI-1020

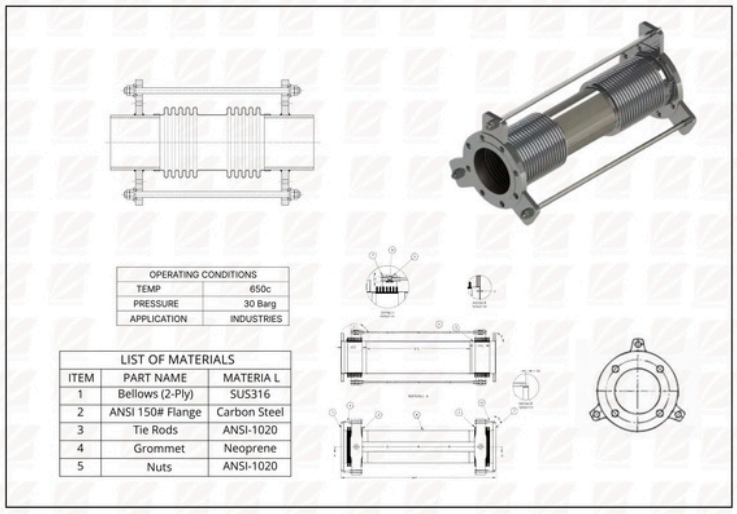

OPERATING CONDITIONS	
TEMP	650c
PRESSURE	30 Barg
APPLICATION	INDUSTRIES

LIST OF MATERIALS		
ITEM	PART NAME	MATERIA L
1	Bellows (2-Ply)	SUS316
2	ANSI 150# Flange	Carbon Steel
3	Tie Rods	ANSI-1020
4	Grommet	Neoprene
5	Nuts	ANSI-1020

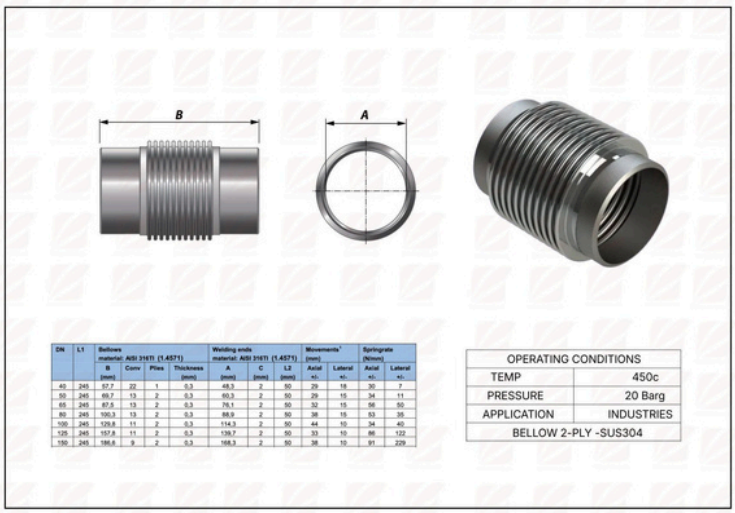

DN	L1	Bellows material: AISI 316Ti (1.4571)				Welding ends material: AISI 316Ti (1.4571)			Movements[1] (mm)		Springrate (N/mm)	
		B (mm)	Conv	Plies	Thickness (mm)	A (mm)	C (mm)	L2 (mm)	Axial +/-	Lateral +/-	Axial +/-	Lateral +/-
40	245	57.7	22	1	0.3	48.3	2	50	29	18	30	7
50	245	69.7	13	2	0.3	60.3	2	50	29	15	34	11
65	245	87.5	13	2	0.3	76.1	2	50	32	15	56	50
80	245	100.3	13	2	0.3	88.9	2	50	38	15	53	35
100	245	129.8	11	2	0.3	114.3	2	50	44	10	34	40
125	245	157.8	11	2	0.3	139.7	2	50	33	10	86	122
150	245	186.6	9	2	0.3	168.3	2	50	38	10	91	229

OPERATING CONDITIONS	
TEMP	450c
PRESSURE	20 Barg
APPLICATION	INDUSTRIES
BELLOW 2-PLY -SUS304	

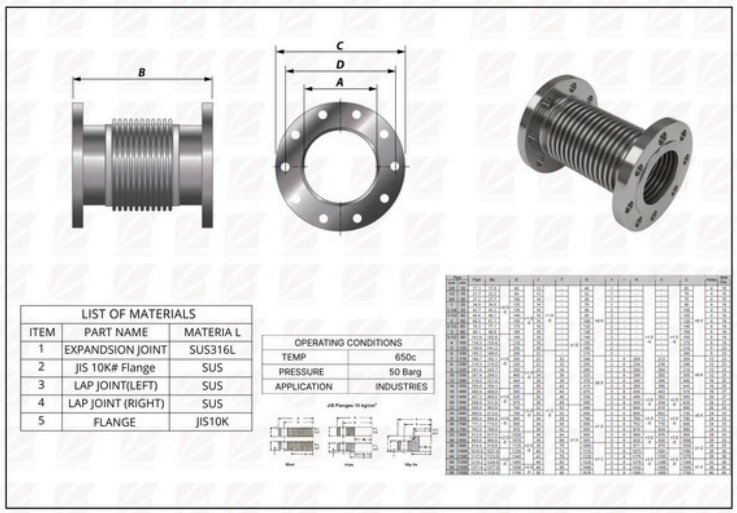

LIST OF MATERIALS		
ITEM	PART NAME	MATERIA L
1	EXPANDSION JOINT	SUS316L
2	JIS 10K# Flange	SUS
3	LAP JOINT(LEFT)	SUS
4	LAP JOINT (RIGHT)	SUS
5	FLANGE	JIS10K

OPERATING CONDITIONS	
TEMP	650c
PRESSURE	50 Barg
APPLICATION	INDUSTRIES

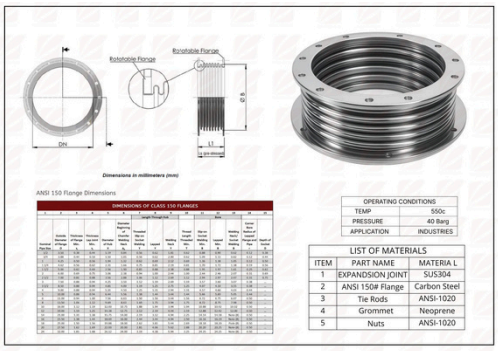

OPERATING CONDITIONS	
TEMP	550c
PRESSURE	40 Barg
APPLICATION	INDUSTRIES

LIST OF MATERIALS		
ITEM	PART NAME	MATERIA L
1	EXPANDSION JOINT	SUS304
2	ANSI 150# Flange	Carbon Steel
3	Tie Rods	ANSI-1020
4	Grommet	Neoprene
5	Nuts	ANSI-1020

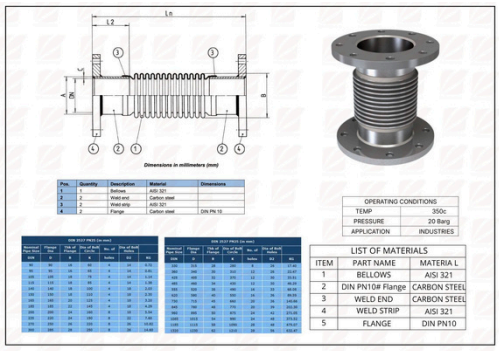

OPERATING CONDITIONS	
TEMP	350c
PRESSURE	20 Barg
APPLICATION	INDUSTRIES

LIST OF MATERIALS		
ITEM	PART NAME	MATERIA L
1	BELLOWS	AISI 321
2	DIN PN10# Flange	CARBON STEEL
3	WELD END	CARBON STEEL
4	WELD STRIP	AISI 321
5	FLANGE	DIN PN10

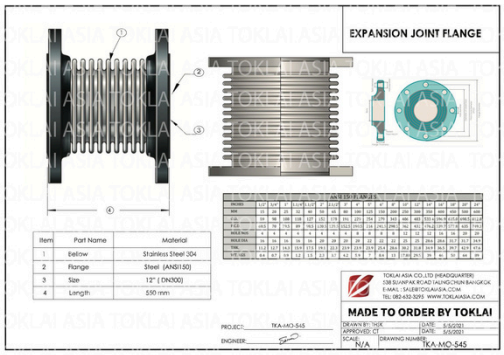

Item	Part Name	Material
1	Bellow	Stainless Steel 304
2	Flange	Steel (ANSI150)
3	Size	12" (DN300)
4	Length	550 mm

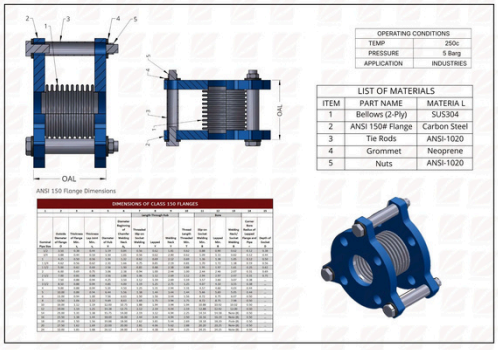

OPERATING CONDITIONS	
TEMP	250c
PRESSURE	5 Barg
APPLICATION	INDUSTRIES

LIST OF MATERIALS		
ITEM	PART NAME	MATERIA L
1	Bellows (2-Ply)	SUS304
2	ANSI 150# Flange	Carbon Steel
3	Tie Rods	ANSI-1020
4	Grommet	Neoprene
5	Nuts	ANSI-1020

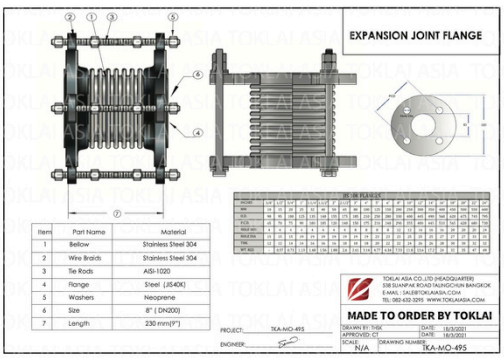

Item	Part Name	Material
1	Bellow	Stainless Steel 304
2	Wire Braids	Stainless Steel 304
3	Tie Rods	AISI-1020
4	Flange	Steel (JIS40K)
5	Washers	Neoprene
6	Size	8" (DN200)
7	Length	230 mm(P")

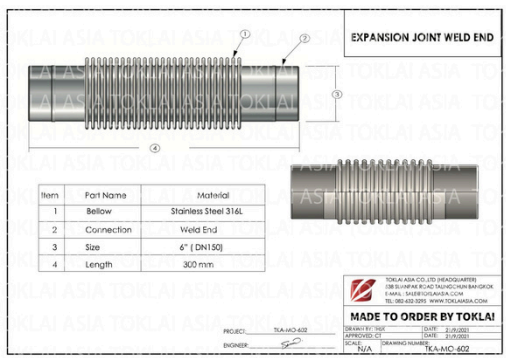

Item	Part Name	Material
1	Bellow	Stainless Steel 316L
2	Connection	Weld End
3	Size	6" (DN150)
4	Length	300 mm

METALLIC EXPANSION JOINT

RELIABLE SOLUTIONS FOR STRUCTURAL MOVEMENT

Expansion Joint Solution



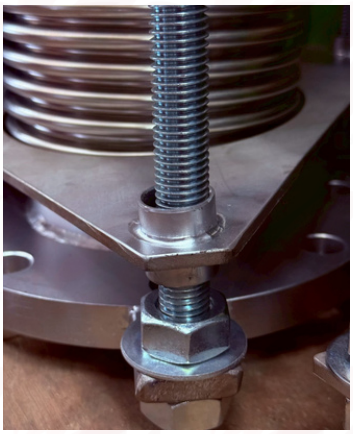










METALLIC EXPANSION JOINT

RELIABLE SOLUTIONS FOR STRUCTURAL MOVEMENT

Expansion Joint Solution


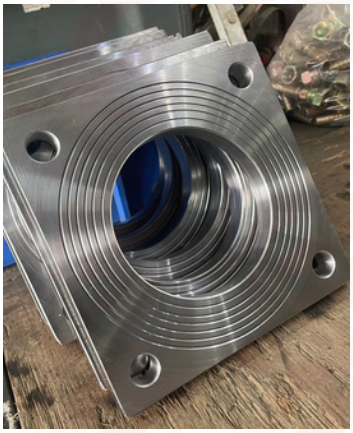




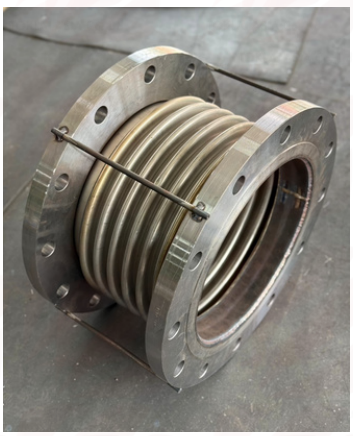






More Information
www.toklaiasia.com / www.toklaisteel.com

Contact Us
E-mail : sales@toklaisteel.com

METALLIC EXPANSION JOINT

RELIABLE SOLUTIONS FOR STRUCTURAL MOVEMENT

Expansion Joint Solution










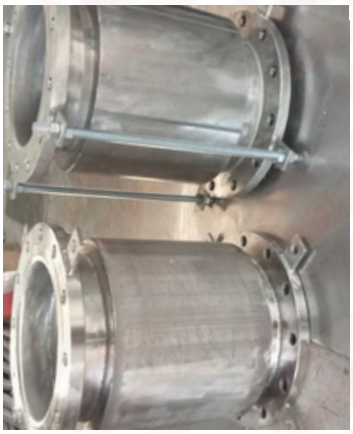
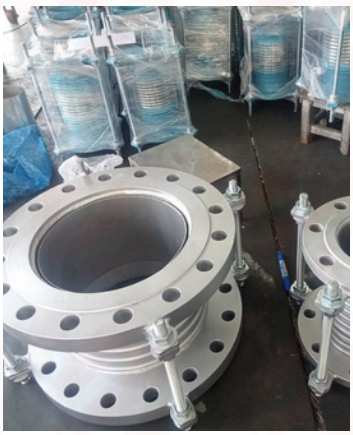


METALLIC EXPANSION JOINT

RELIABLE SOLUTIONS FOR STRUCTURAL MOVEMENT

Expansion Joint Solution














METALLIC EXPANSION JOINT

RELIABLE SOLUTIONS FOR STRUCTURAL MOVEMENT

Expansion Joint Solution





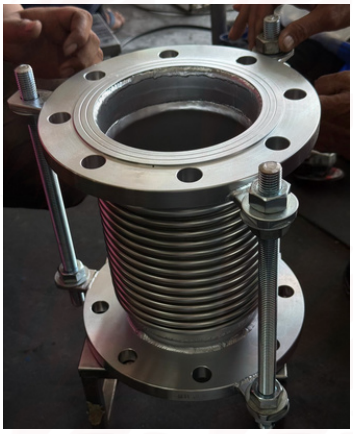




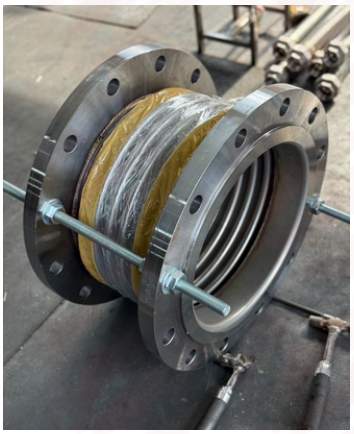



METALLIC EXPANSION JOINT

RELIABLE SOLUTIONS FOR STRUCTURAL MOVEMENT

Expansion Joint Solution














METALLIC EXPANSION JOINT

RELIABLE SOLUTIONS FOR STRUCTURAL MOVEMENT

Expansion Joint Solution










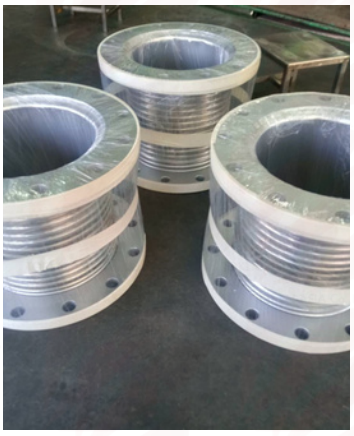



METALLIC EXPANSION JOINT

RELIABLE SOLUTIONS FOR STRUCTURAL MOVEMENT

Expansion Joint Solution
















Custom Bellows & Expansion Joint Manufacturer

Toklai Asia Co.,Ltd is your premier custom metal bellows and expansion joint manufacturer, delivering precision-engineered solutions for even the most demanding piping applications. As a leading industrial metal bellows manufacturer and pipe expansion joint supplier, we specialize in both standard and fully customized bellows, expansion joints, flex joints, and OEM components. Whether you need bespoke configurations to accommodate extreme temperature fluctuations or high-cycle fatigue resistance, our Thailand-based facility combines advanced forming techniques with rigorous quality control to ensure every assembly meets standards.

บริษัท โตไกล เอเชีย จำกัด (สำนักงานใหญ่)

สำนักงานใหญ่ : 538 ถนนสวนผัก แขวงตลิ่งชัน
เขตตลิ่งชัน กรุงเทพฯ 10170
E-mail : sales@toklaisteel.com